Throughout the guide teaching tips are in red.

Overview

Over a few class periods, this three-part activity introduces students to levers and the concept of mechanical advantage. On the first day, before learning about levers, students are presented with nail clipper bases without the lever attached, are asked to use it to cut a nail, and then to draw the tool as-is, labeling the drawing to show where force is applied and where it is used. Next, they receive the clipper lever, assemble it, use it, and learn that the job is easier. They then redraw the clippers with the lever, again showing where force is applied and where it is used. After this exploration, students go through similar steps with scissors. On the next day, students again have clippers, scissors, and their drawings. This time they identify the levers in these objects, measure distances that both ends of the lever travel, and develop some ideas about how the levers might make things easier, including the concept of work.

Objectives

- Students can explain that levers make it possible to apply more force.
- Students can demonstrate the mechanical advantage (increased efficiency) of a lever, using less force over a greater distance to produce more force over a shorter distance.

NC Essential Science Standards

7.P.2.4 Explain how simple machines such as inclined planes, pulleys, **levers** and wheels and axles are used to create **mechanical advantage and increase efficiency.**

Science Background for Teachers

This activity explores ways to do some simple things more easily. It is not intended to lead students to understand the principles behind mechanical advantage. However, for your background, the levers in this activity illustrate mechanical advantage. All simple machines, including levers, take in and put out forces (amount of push or pull) exerted over some amount of distance. The technical quantity called “work” is the product of force times the distance that force is applied. A simple machine is something you do “work” on, and it does “work” on something else. With simple machines, the product of distance times force going in is about the same as the product of distance times force coming out. Simple machines change the proportions coming in and going out. For example, you apply a force over a long distance into the handles of a nutcracker, and the nutcracker applies much more force on the nut, but over a very short distance (just enough to crack the nut). The machine trades between force and distance. With a lever, if the tipping point (fulcrum) is near the object being lifted, you push down a long way to lift the object a short distance. However, you can lift a person with just your fingertip.

Materials and Preparation

Materials for the whole class

The kit contains 16 assembled nail clippers. You will disassemble them and let students have only the base at first.

- Disassembled fingernail clipper.
- Scissors.
- Toothpicks, round.

- Student notebooks*
- YouTube videos: https://www.youtube.com/watch?v=xFiwkxrO7GM (Adult)
  https://www.youtube.com/watch?v=hXVfPtewN1M (Child)

* supplied by the teacher
.

Preparation

Follow instructions on YouTube and Support Document 1 to take the fingernail clippers apart into three pieces. Separate the parts into three distinct piles: bases, pins, and levers. When students begin, they will only have the bases. Later, they will have the levers and pins. To help them assemble the clippers when the time comes, project either the YouTube video of an adult assembling the nail clipper (clearer instructions) or the child assembling it (peer teaching), whichever you prefer.

Procedure for teams of 2

Part 1 – Exploration, fingernail clipper (30 minutes)

1. Give each pair of students a nail clipper base.
2. Ask them to draw the clipper in their notebooks (just as it is, without the pin and lever). After they have drawn it, ask them to use it to trim a fingernail **(substitute a toothpick if preferred).** After they have tried to do this, ask them to label on their drawing the point where they pressed to try to cut the nail, and the part of the clipper that applied force to the nail.
3. Let each pair have a lever and pin, and ask them to assemble all three parts of the clipper so that it works. Show one of the YouTube videos and/or project SD 1..
4. Ask all teams to draw the assembled clipper. After they draw it, ask them to use it to trim a fingernail or cut a toothpick in the middle. When they have done this, ask them to label the point where they pressed to make the cut and the part of the clipper that applied force to what they tried to cut. Ask them to write down as many differences as they can think of between the way the clipper worked as one piece, and the way it worked completely assembled.

Part 2 – Exploration, scissors (20 minutes)

1. Give each pair of students a scissors and a toothpick.
2. Ask all teams to cut the toothpick with the scissors. After they do this, ask them to show where they cut the toothpick on the scissors. **Most students will cut it near the joint of the scissors.** Ask why they chose to cut at that place. **Most will say that it is easier there.** Ask what they think makes it easier to cut at that place.
3. Ask teams to try cutting the toothpick at the tip of the scissors, and at the point right next to the joint, and in the middle of the blade. After they do this, ask what they noticed.
4. Ask all individual students to draw the scissors in their notebooks, and show three points where they cut the toothpick. Ask them to label these: easier, harder, hardest.

5. Ask teams to describe anything they notice that is similar between the way the nail clippers and the scissors work, aside from the fact that they both cut things.

Part 3 – What makes them work (30 minutes)

Materials for teams of 2

- Notebooks from the previous lessons
- Scissors
- A toothpick
- An assembled nail clipper
- A ruler

.

Procedure

1. Ask students to look in their notebooks at the diagrams of the assembled nail clipper. Ask for ideas about what made it easier to clip things with the lever attached. **They might say things like "It worked better," or "it pressed harder."** If the class does not volunteer ideas about how the lever made it easier, ask for some specific ideas about how the lever attached makes the clippers "work better" or "press harder." The object of this is to get the class thinking about what the lever is doing and how it might work, not necessarily to solve the problem.
2. Explain that the class will gather information about the assembled clipper to learn about how it presses harder with the lever attached.
   - Show Support Document 2 and ask teams to use the rulers to measure the distance in millimeters that the blades travel from completely open to completely closed. Ask them to write that number beside the blades on their diagram of the clippers
   - Ask teams to measure the distance in millimeters that the lever travels from the point where the blades are completely open to the point where the blades are completely closed. Ask them to write that number beside the lever on their diagram of the clippers.
   - Ask the class what they notice about the two measurements. After a few students say that the lever goes farther, and the blades go only a short distance, ask for ideas about how pressing the lever farther and making the blades go a short distance might make the blades press harder. Again, the object is to get them to think about this, not to give a sound explanation.
3. Ask the class to look at their drawings of the scissors with three points where they cut the toothpick labeled easier, harder, hardest.
   - **Show Support Document 2** and ask teams to make pencil marks on the scissors blades at each of these three points: easier, harder, hardest.
   - Ask teams to open the scissors blades as far as they will go, and measure the distance the blades travel from all the way open to all the way closed at each of the 3 points they have marked.
   - Also ask teams to measure the distance the scissors handles travel from all the way open to all the way closed.

- Ask about similarities students see between the measurements of the scissors and the clippers. Ask students what these similarities tell them about what makes the two items press harder. **They might say that the handles travel farther than the blades on both of them. From the scissors, they might say that where the blades don't go very far compared with the distance the lever or handles travel, the blades press harder.**
- **At this point, it is important for students to understand that the force being applied over a longer distance (the handle) is being concentrated to a shorter distance, near the fulcrum, and thus making it much stronger.**

4. Ask students to write a rule in their own words about what allows the scissors and the clippers to apply a greater force.
5. **Show Support Document 2** and explain that both objects have levers. The clipper lever is labeled "lever" in Support Document 2. Ask students where the levers are in the scissors. **Both halves of the scissors are levers.** Point out that both the clipper and scissors have a place where their levers pivot. Ask students to find them and point them out on both the scissors and the clippers in Support Document 2. Explain that this point is called the "fulcrum" and provide students with the definition: "The fulcrum is the support about which a lever pivots."

Extension

Inform students that levers are everywhere. Ask students to look around their home and locate levers. Ask them to share with the class a lever they identified and how it works. Some examples may include: Bottle opener, hammer claw, tweezers, tongs, and wheel barrow.

Support Document 1

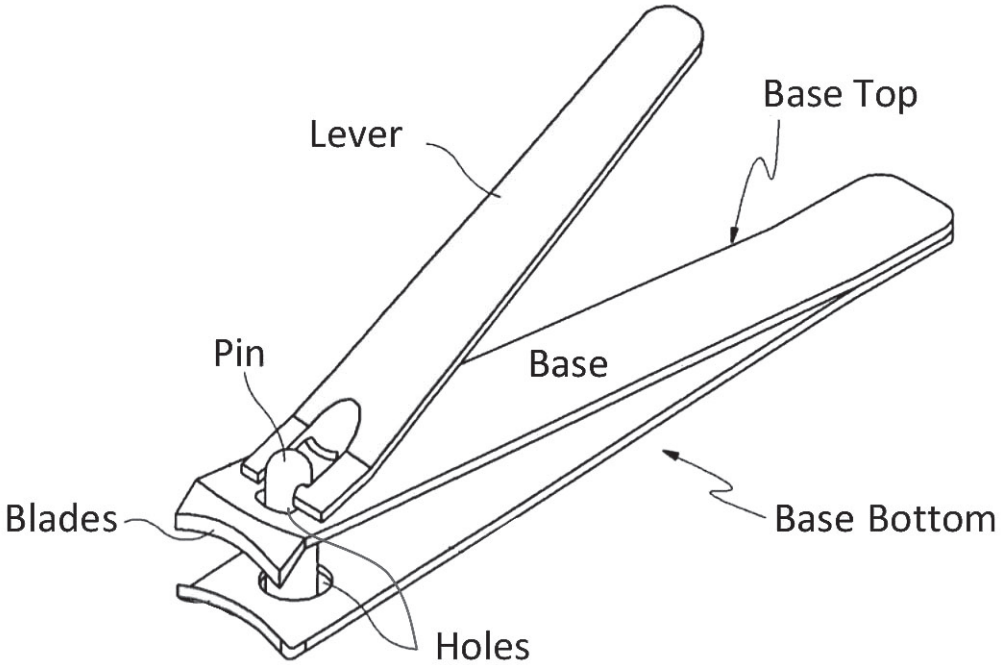

HOW TO DISASSEMBLE (for the teacher): With the lever up, grasp the base with your thumb on the pin bottom. Push on the base (not the lever) until the blades close. The pin notch will rise above the base top and the lever will become loose. With the base squeezed shut and blades closed, use your other hand to work the lever free. When the lever is free, the pin will fall out.

HOW TO ASSEMBLE (for students): Push the pin through the holes. Grasp the base in one hand and put your thumb on the pin bottom. While pressing on the pin bottom, squeeze the base shut so that the blades close. The pin notch will stick out above the holes. The lever has a small square hole in it. Hook the thin outer edge of that hole into the pin notch. Release pressure and align the lever for use.

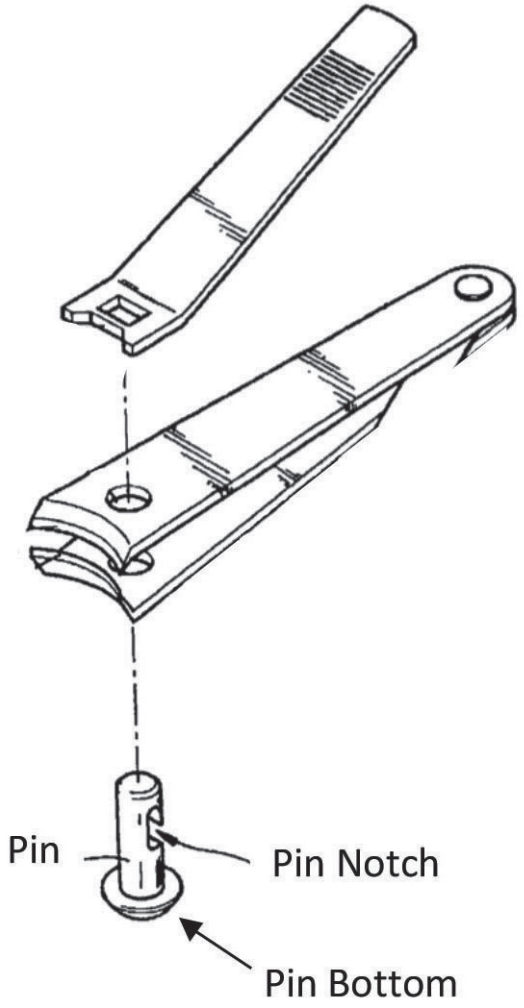

Support Document 2